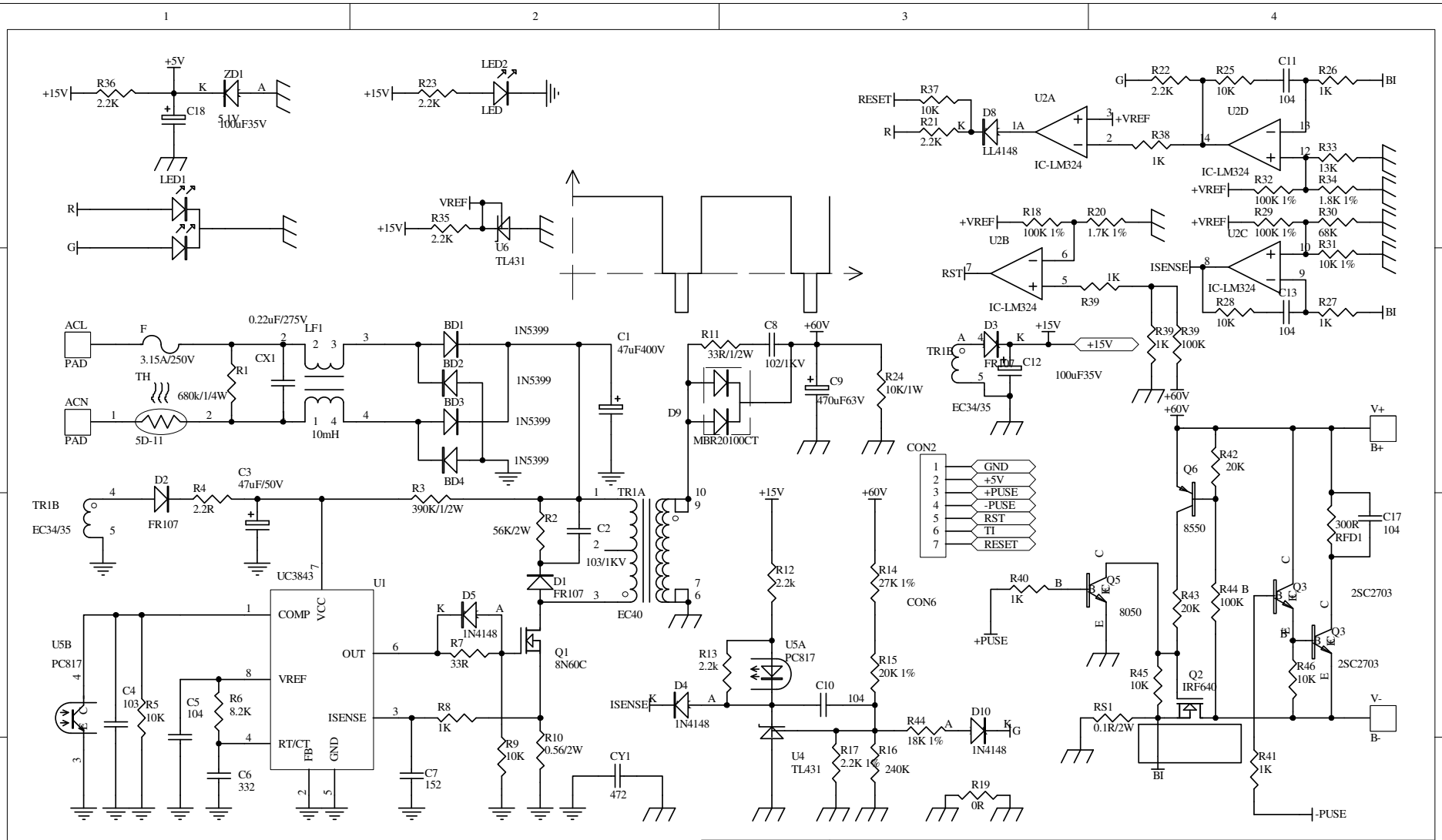

Title:	**48V14AH 电动车智能充电器**		
NO.	Rev:	P.	Date:
Drawn:	Auditing:	Authorize:	