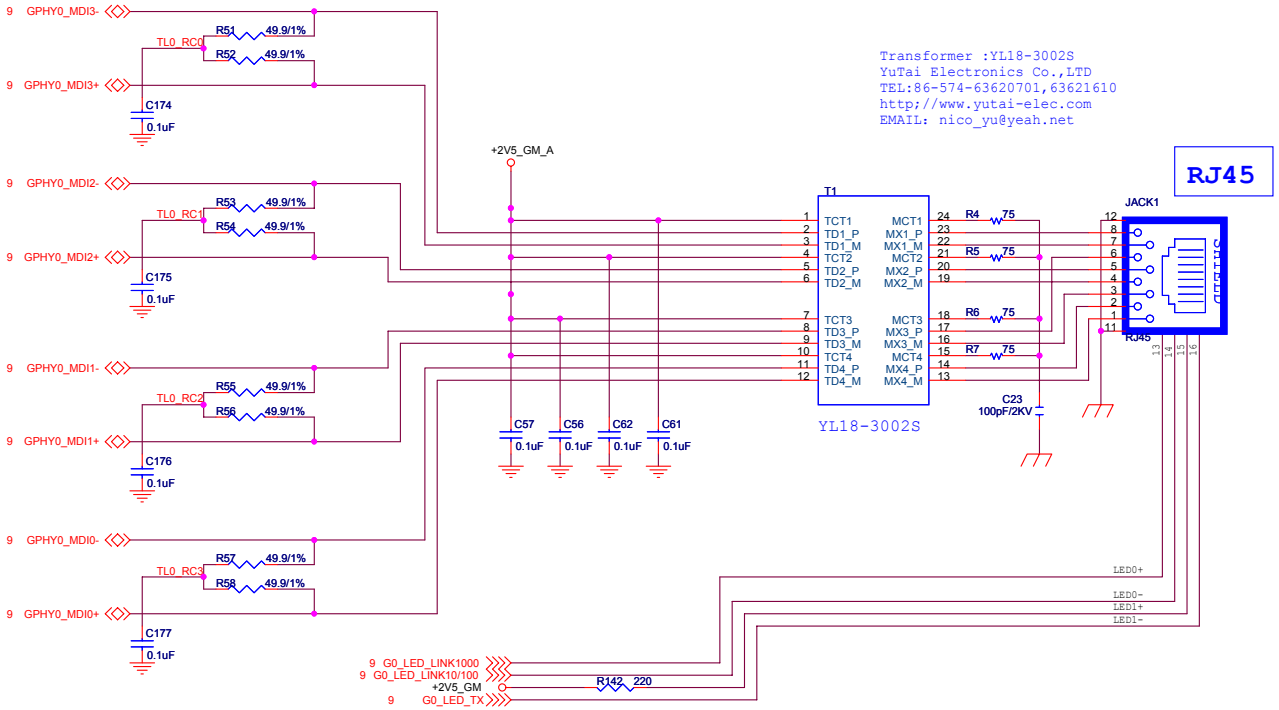
Transformer :YL18-3002S
YuTai Electronics Co.,LTD
TEL:86-574-63620701,63621610
http;//www.yutai-elec.com
EMAIL: nico_yu@yeah.net
RJ45
T1
JACK1
YL18-3002S
Rj45
+2V5_GM_A
9 GPHY0_MDI3-
9 GPHY0_MDI3+
9 GPHY0_MDI2-
9 GPHY0_MDI2+
9 GPHY0_MDI1-
9 GPHY0_MDI1+
9 GPHY0_MDI0-
9 GPHY0_MDI0+
TL0_RC0
TL0_RC1
TL0_RC2
TL0_RC3
R51 49.9/1%
R52 49.9/1%
R53 49.9/1%
R54 49.9/1%
R55 49.9/1%
R56 49.9/1%
R57 49.9/1%
R58 49.9/1%
C174 0.1uF
C175 0.1uF
C176 0.1uF
C177 0.1uF
C57 0.1uF
C56 0.1uF
C62 0.1uF
C61 0.1uF
R4 75
R5 75
R6 75
R7 75
C23 100pF/2KV
TCT1 TD1_P TD1_M TCT2 TD2_P TD2_M
TCT3 TD3_P TD3_M TCT4 TD4_P TD4_M
MCT1 MX1_P MX1_M MCT2 MX2_P MX2_M
MCT3 MX3_P MX3_M MCT4 MX4_P MX4_M
LED0+
LED0-
LED1+
LED1-
9 G0_LED_LINK1000
9 G0_LED_LINK10/100
+2V5_GM
9 G0_LED_TX
R142 220
Isolation for RWR
+2V5_GM
+2V5_GM_A
L20
BEAD
C182
10uF

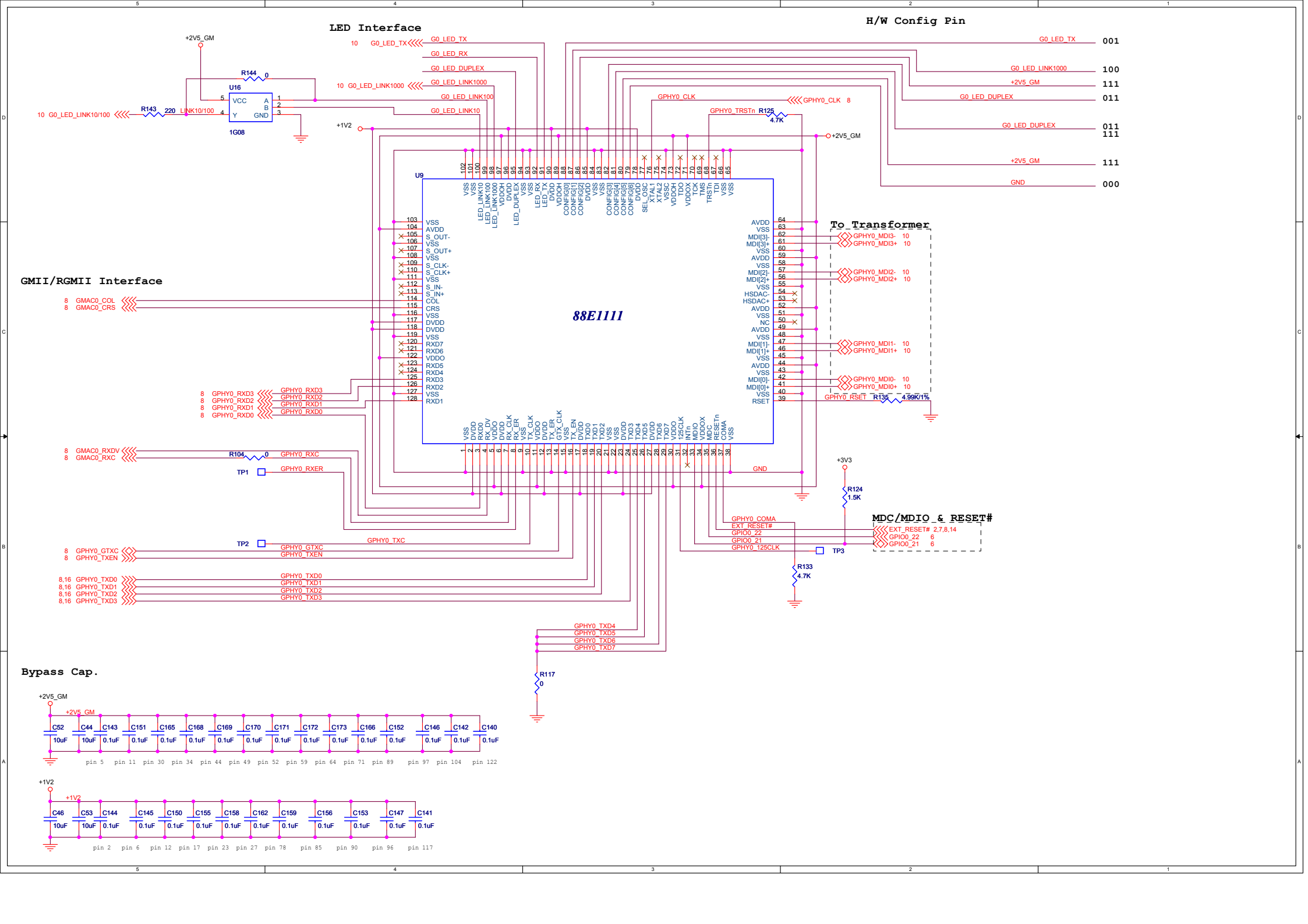
LED Interface
H/W Config Pin
GMII/RGMII Interface
To Transformer
MDC/MDIO & RESET#
Bypass Cap.
88E1111
U9
U16
1G08
+2V5_GM
+1V2
+3V3
R144 0
R143 220
R125 4.7K
R135 4.99K/1%
R124 1.5K
R133 4.7K
R117 0
R104 0
TP1
TP2
TP3
G0_LED_TX
G0_LED_RX
G0_LED_DUPLEX
G0_LED_LINK1000
G0_LED_LINK100
G0_LED_LINK10
G0_LED_LINK10/100
LINK10/100
GPHY0_CLK
GPHY0_TRSTn
GMAC0_COL
GMAC0_CRS
GPHY0_RXD3
GPHY0_RXD2
GPHY0_RXD1
GPHY0_RXD0
GMAC0_RXDV
GMAC0_RXC
GPHY0_RXC
GPHY0_RXER
GPHY0_TXC
GPHY0_GTXC
GPHY0_TXEN
GPHY0_TXD0
GPHY0_TXD1
GPHY0_TXD2
GPHY0_TXD3
GPHY0_TXD4
GPHY0_TXD5
GPHY0_TXD6
GPHY0_TXD7
GPHY0_MDI3-
GPHY0_MDI3+
GPHY0_MDI2-
GPHY0_MDI2+
GPHY0_MDI1-
GPHY0_MDI1+
GPHY0_MDI0-
GPHY0_MDI0+
GPHY0_RSET
GND
GPHY0_COMA
EXT_RESET#
GPIO0_22
GPIO0_21
GPHY0_125CLK
001
100
111
011
000
C52 10uF
C44 10uF
C143 0.1uF
C151 0.1uF
C165 0.1uF
C168 0.1uF
C169 0.1uF
C170 0.1uF
C171 0.1uF
C172 0.1uF
C173 0.1uF
C166 0.1uF
C152 0.1uF
C146 0.1uF
C142 0.1uF
C140 0.1uF
pin 5 pin 11 pin 30 pin 34 pin 44 pin 49 pin 52 pin 59 pin 64 pin 71 pin 89 pin 97 pin 104 pin 122
C46 10uF
C53 10uF
C144 0.1uF
C145 0.1uF
C150 0.1uF
C155 0.1uF
C158 0.1uF
C162 0.1uF
C159 0.1uF
C156 0.1uF
C153 0.1uF
C147 0.1uF
C141 0.1uF
pin 2 pin 6 pin 12 pin 17 pin 23 pin 27 pin 78 pin 85 pin 90 pin 96 pin 117