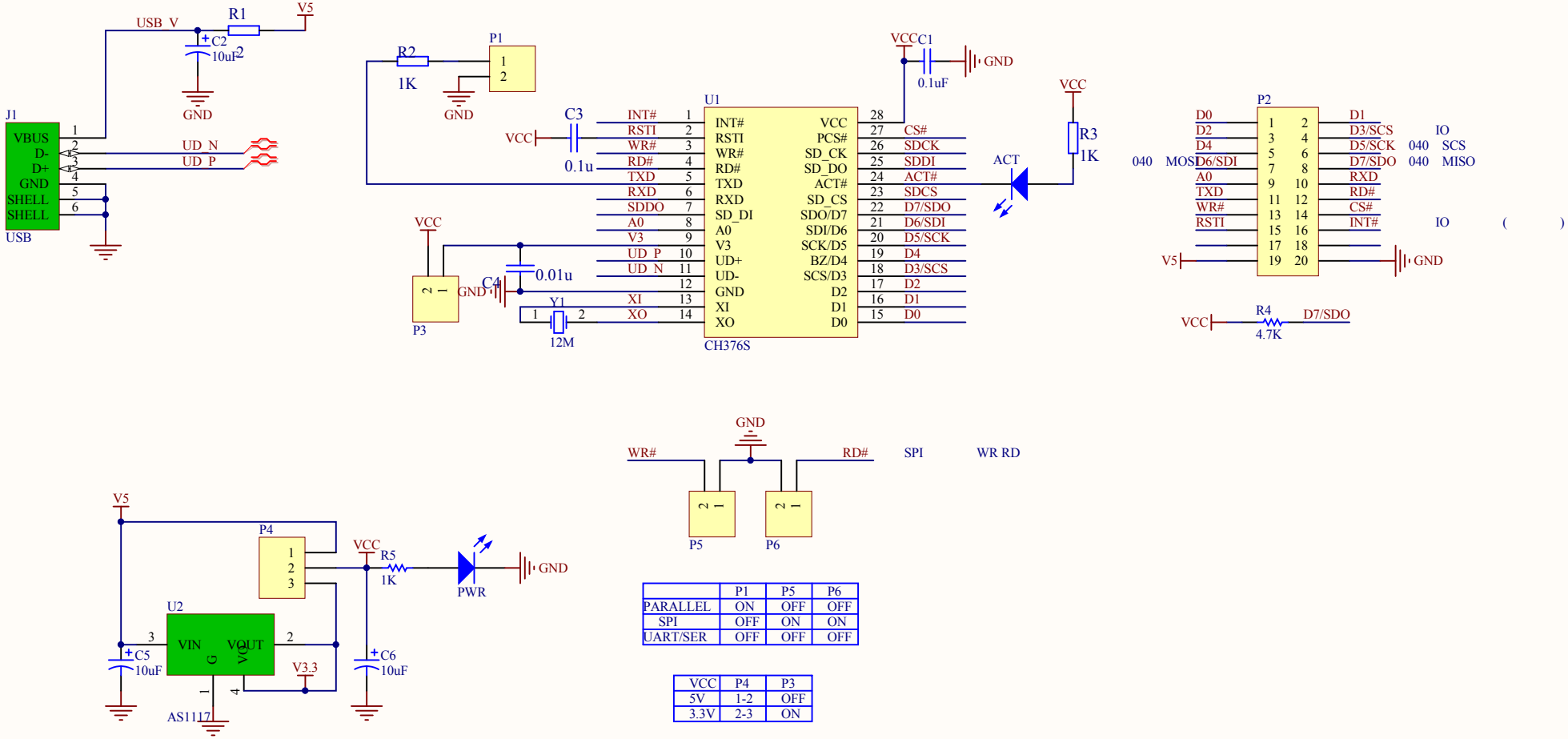

	P1	P5	P6
PARALLEL	ON	OFF	OFF
SPI	OFF	ON	ON
UART/SER	OFF	OFF	OFF

VCC	P4	P3
5V	1-2	OFF
3.3V	2-3	ON

Title		
Size A4	Number	Revision
Date: 2011-6-2		Sheet of
File: G:\Pcb_Project\CH376\CH376.SchDoc		Drawn By: