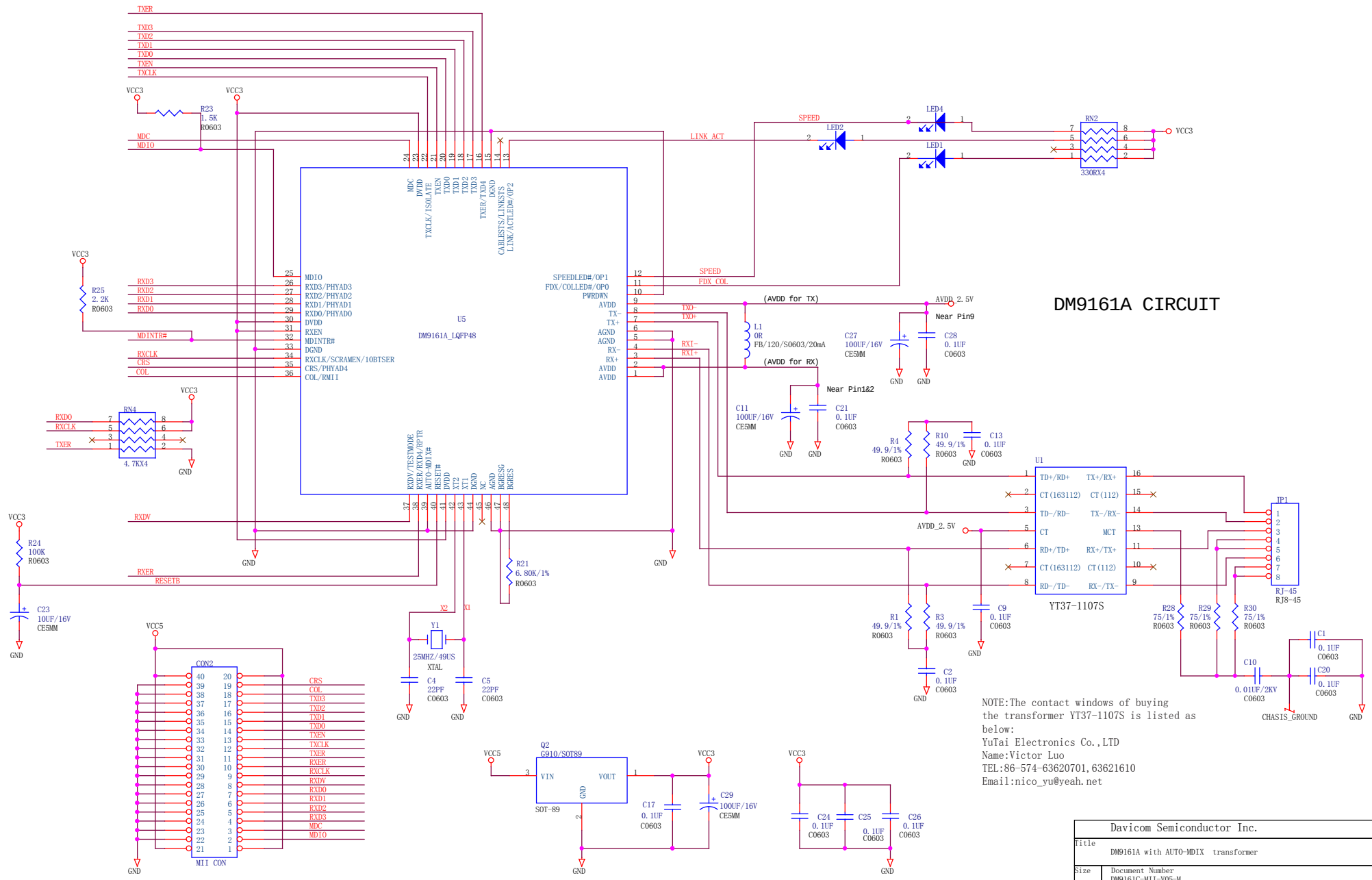

NOTE:The contact windows of buying the transformer YT37-1107S is listed as below:
YuTai Electronics Co.,LTD
Name:Victor Luo
TEL:86-574-63620701,63621610
Email:nico_yu@yeah.net

Davicom Semiconductor Inc.		
Title: DM9161A with AUTO-MDIX transformer		
Size	Document Number: DM9161C-MII-V05-M	Rev: 0.5-M
Date: Friday, May 21, 2010	Sheet 2 of 4	